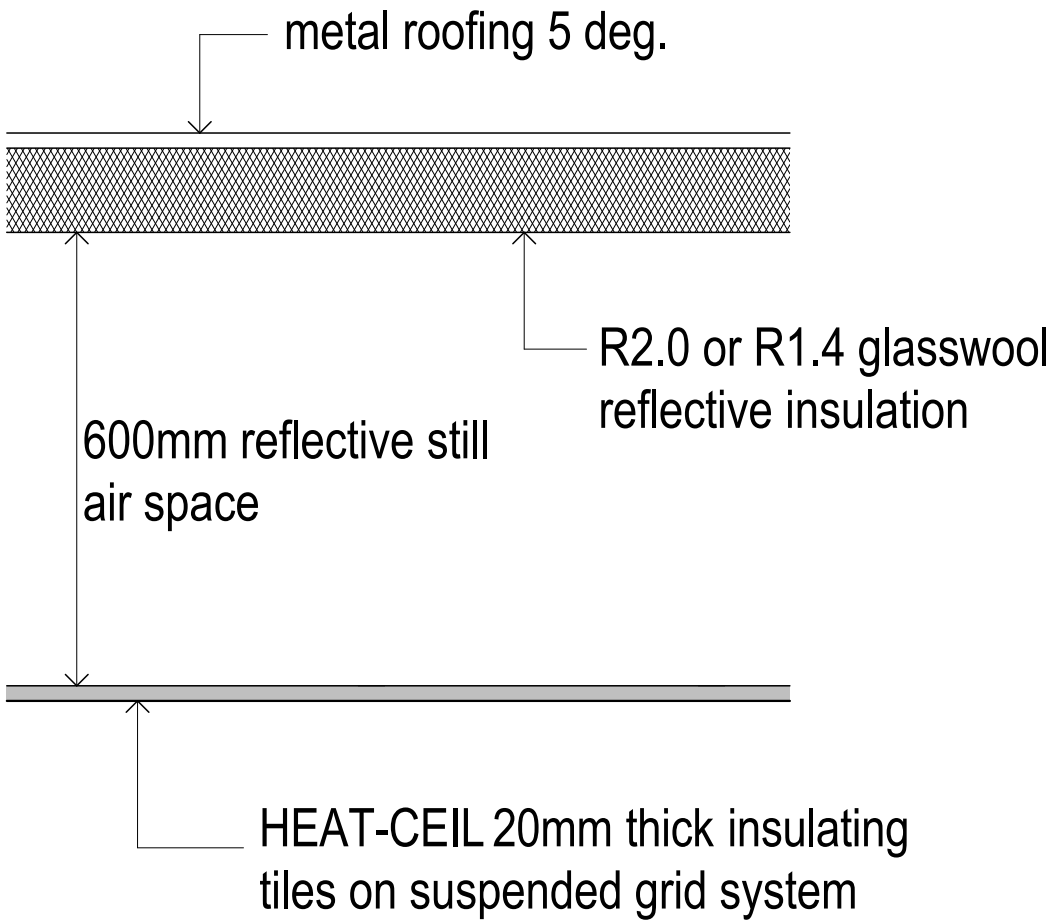

ELEVATION

HEAT-CEIL SUSPENDED CEILING

DRAWN : jc FILE
ISSUE : DATE